tucai®

VALVES RANGE

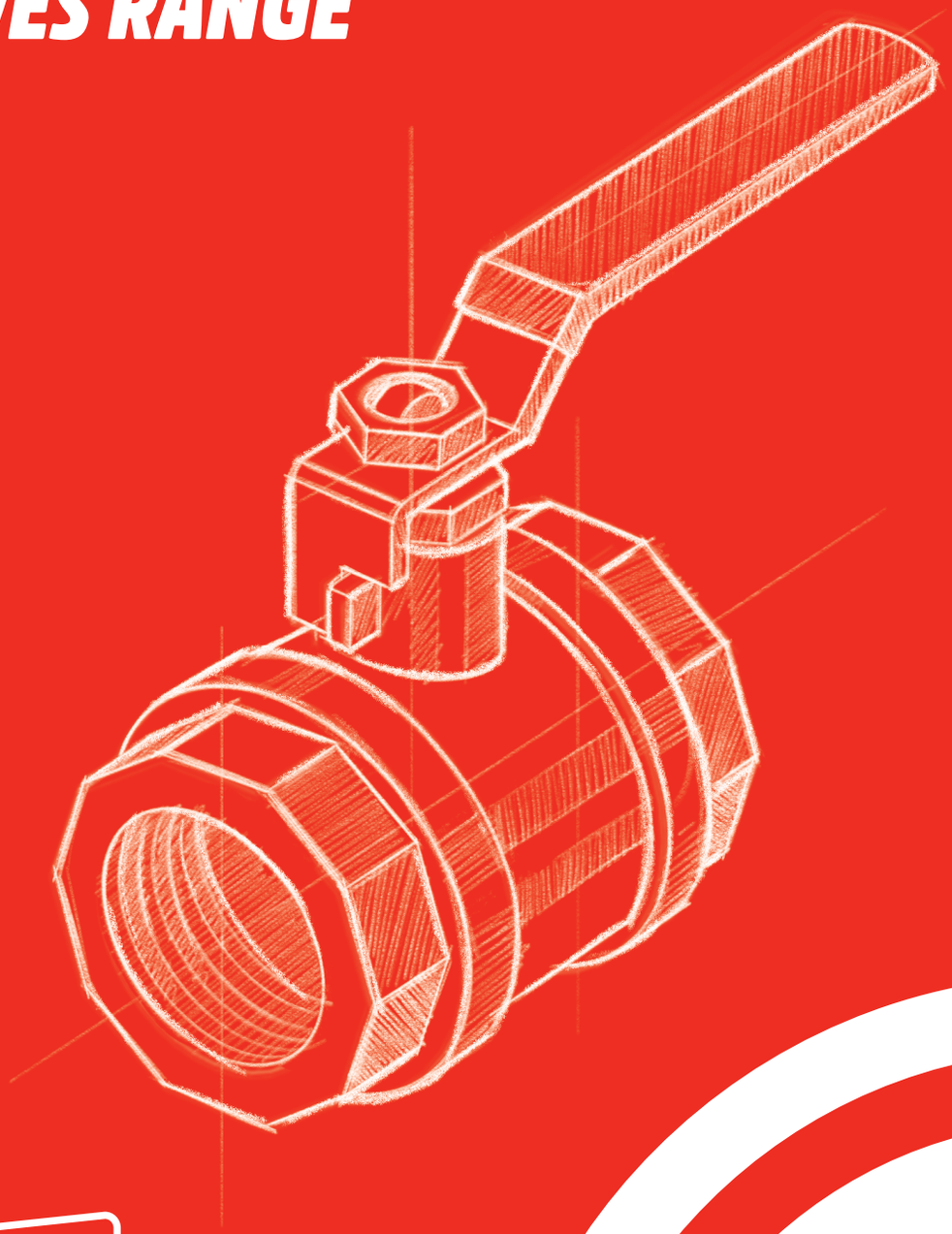

TMM

www.tmmanterola.com

Tips for installation, use and maintenance

TECHNICAL SPECIFICATIONS C-501

PRODUCT

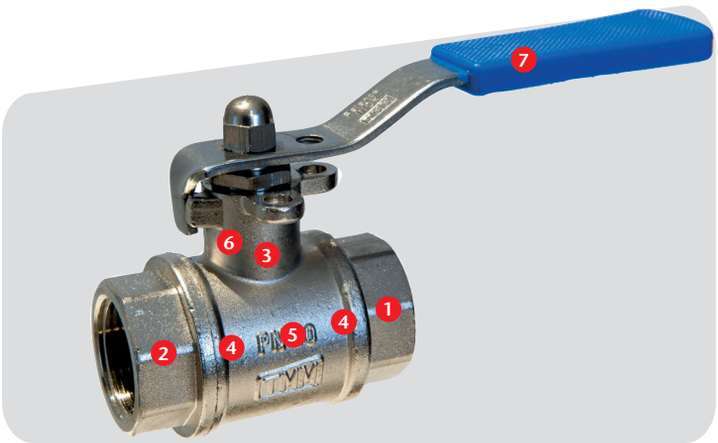

MATERIALS

1. **BODY** *CW617N brass, according to EN 12165.*
2. **LID** *CW617N brass, according to EN 12165.*
3. **SHAFT** *CW617N brass, according to EN 12164.*
4. **SEATS** PTFE, *suitable for contact with drinking water.*
5. **BALL** Brass · *Chrome-Plated.*
   · *Anti-Lime.*
   · *Anti-Ice.*
   · *Anti-Lime & Anti-Ice.*
6. **WATER-TIGHTNESS SEAL** EPDM
7. **HANDLES** · *AISI-304 Stainless Steel.*
   · *Brass butterfly handle.*
   · *Brass square handle.*
   Nickel-Plated brass.

FITTINGS

FEATURES

NOMINAL PRESSURE *60 bar (PN-60).*
MAXIMUM TEMPERATURE *150°C.*
MINIMUM TEMPERATURE *-10°C (Anti-Ice -30°C).*
Anti-leak system *on shaft.*
Padlockable

NOTE: All materials used to manufacture these valves are suitable for contact with water intended for human consumption.

APPROVALS

acs

KV FLOW COEFFICIENT

It is called Kv to the water quantity, in cubic meter per hour, which must pass through the valve to generate 1 bar pressure loss.

Each valve size has a Kv value.

Measure	1/2"	3/4"	1"	1.1/4"	1.1/2"	2"
K_v [(m³/h)/(bar)$^{1/2}$]	17	31	58	82	90	577

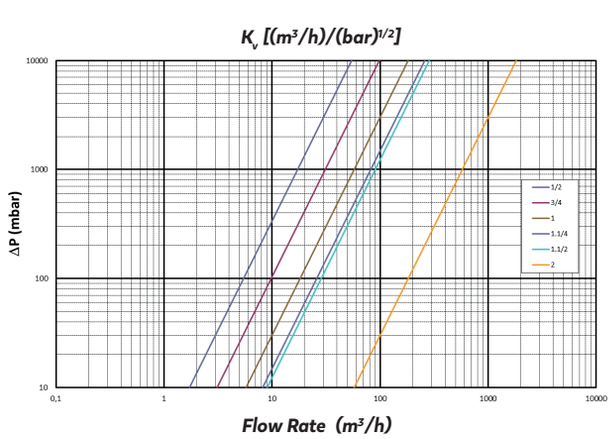

PRESSURE LOSS CHART

Pressure loss chart depending on the flow, according to EN 1267.

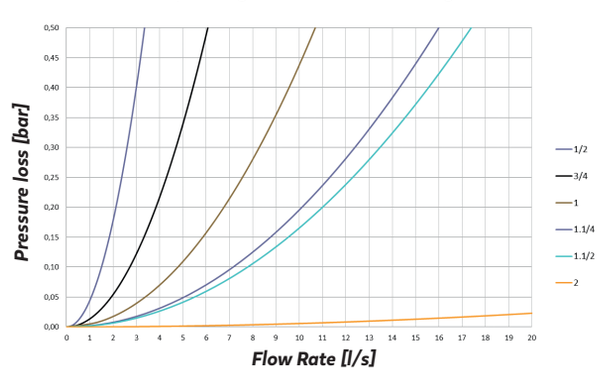

MAIN DIMENSIONS

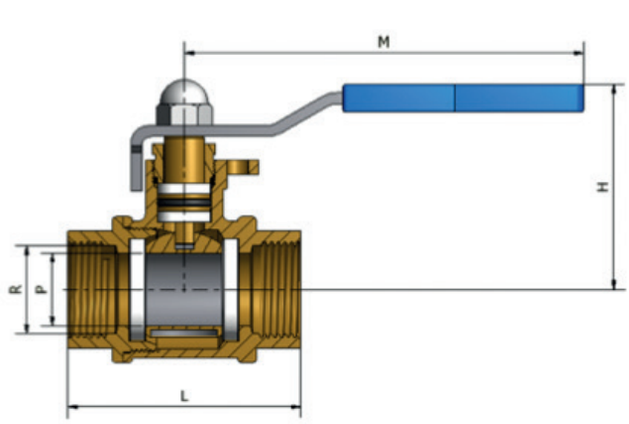

			Dimensions [mm]			
Ref.	Measure R	DN	P	L	H	M
0201601	1/4"	8	10	47	50	91
0201602	3/8"	10	11,5	48	50	91
0201603	1/2"	15	15	52	53	108
0201604	3/4"	20	20	63	56	108
0201605	1"	25	25	73	63	135
0201606	1, 1/4"	32	32	86,5	68	135
0201607	1, 1/2"	40	40	96,5	80	155
0201608	2"	50	50	114	88	155
0201609	2, 1/2"	65	65	156	117	284
0201610	3"	80	80	182	129	284

www.tmmanterola.com

Tips for installation, use and maintenance

TECHNICAL SPECIFICATIONS M-550

PRODUCT

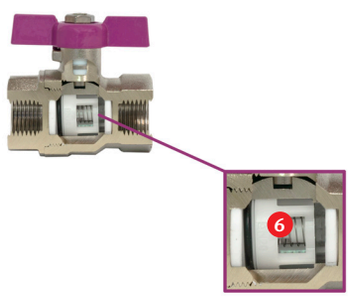

MATERIALS

1. **BODY** *CW617N brass, according to EN 12165*
2. **LID** *CW617N brass, according to EN 12165.*
3. **SHAFT** *CW617N brass, according to EN 12164.*
4. **SEATS PTFE,** *suitable for contact with drinking water.*
5. **BALL** *Brass, chrome-plated*
6. **CHECK-VALVE** POM.
7. **HANDLE** *· AISI-304 Stainless Steel.*
   · Brass butterfly handle.
   · Brass square handle.

Nickel-plated surface treatment on brass external surfaces. All surfaces in contact with water are free of nickel.

FEATURES

NOMINAL PRESSURE *16 bar (PN-16).*
MAXIMUM TEMPERATURE *70°C.*
MINIMUM TEMPERATURE *-10°C.*
Anti-leak system *on shaft.*
Water starts to flow at a pressure of 0.05 bar.
Check-valve according to EN 13959.

NOTE: *All materials used to manufacture these valves are suitable for contact with water intended for human consumption.*

APPROVALS

acs

FITTINGS

FLOW RATE VS PRESSURE CHART

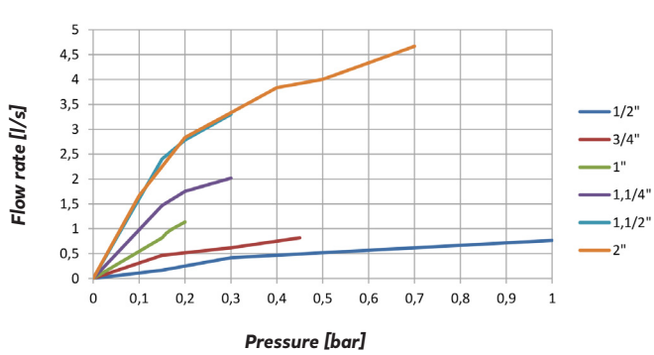

MAIN DIMENSIONS

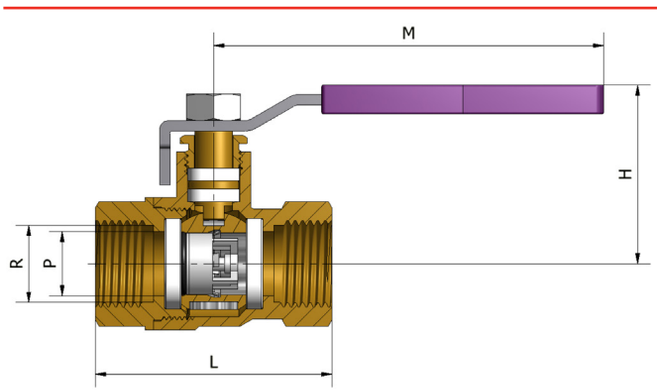

			Dimensions [mm]			
Ref.	Measure R	DN	P	L	H	M
0208010	1/2"	15	13	57	42	94
0208011	3/4"	20	18	62	47	94
0208012	1"	25	23	71	55	125
0208004	1, 1/4"	32	26	86	61	125
0208005	1, 1/2"	40	32	94	73	146
0208006	2"	50	46	112	81	146

www.tmmanterola.com

Tips for installation, use and maintenance

TECHNICAL SPECIFICATIONS C-850 C-851

PRODUCT

MATERIALS

1. **BODY** *CW617N brass, according to EN 12165. Chrome-plated.*
2. **CARTRIDGE** *CW617N brass, according to EN 12165. Ceramic disc closing system.*
3. **HANDLE** *Metal, chrome-plated*
4. **TAILPIECE** *Stainless steel*

FEATURES

NOMINAL PRESSURE *16bar (PN-16).*
MAXIMUM TEMPERATURE *100°C*
MINIMUM TEMPERATURE *0°C*
Anti-lime.Flow rate > 33lit/min.
At a pressure of 3bar.
Based on EN-ISO 3822-2.
¼ turn closure.
KNURLED VALVE INLET THREAD.

NOTE: *All the materials used to make these valves are suitable for contact with water intended for human consumption.*

APPROVALS

RD 140/2003
EUROPEAN DIRECTIVE 98/83

MAIN DIMENSIONS

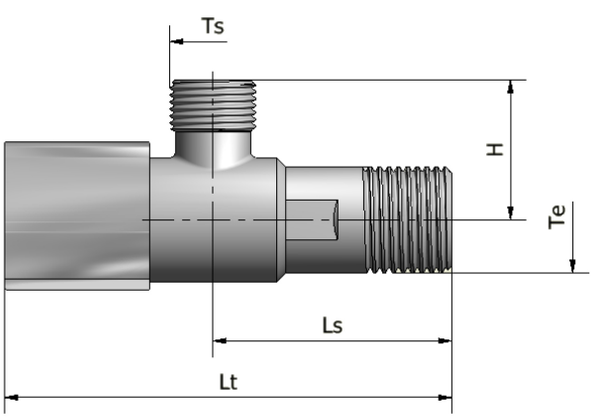

Ref.	Dimensions (mm)				
	Ts	Te	Lt	Ls	H
0400001	3/8"	1/2"	86	46	27
0400002	1/2"				
0400003	3/4"				

www.tmmanterola.com

Tips for installation, use and maintenance

TECHNICAL SPECIFICATIONS C-340

PRODUCT

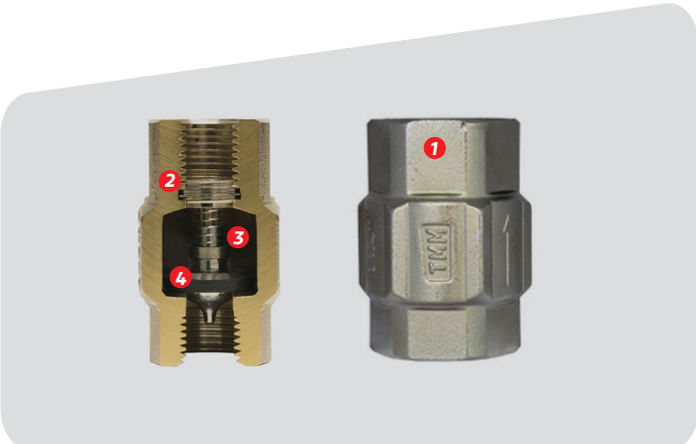

MATERIALS

1. **BODY** *CW617N brass, according to EN 12165.*
2. **PLUG & SHAFT** *CW617N brass, according to EN 12164.*
3. **SEAT'S PLUG** PTFE *suitable for contact with drinking water .*
4. **PLUG SEAL** FPM.

Nickel-Plated brass.

FEATURES

NOMINAL PRESSURE *30 bar (PN-30).*
MAXIMUM TEMPERATURE *150°C.*
MINIMUM TEMPERATURE *0°C.*
Water starts to flow at a pressure of 0.5 bar.

NOTE: *All materials used to manufacture these valves are suitable for contact with water intended for human consumption.*

MAIN DIMENSIONS

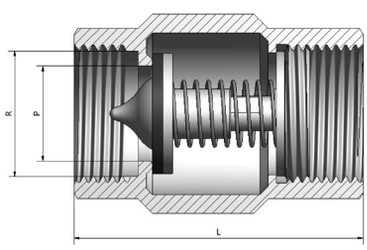

			Dimensions [mm]	
Ref.	Measure R	DN	P	L
0501200	3/8"	10	11	55
0501201	1/2"	15	14,5	55
0501202	3/4"	20	19	63
0501203	1"	25	23	70
0501204	1, 1/4"	32	31	75
0501205	1, 1/2"	40	38	83
0501206	2	50	48	90
0501207	2, 1/2"	65	62	120
0501208	3"	80	73	127

www.tmmanterola.com

Tips for installation, use and maintenance

TECHNICAL SPECIFICATIONS C-361

PRODUCT

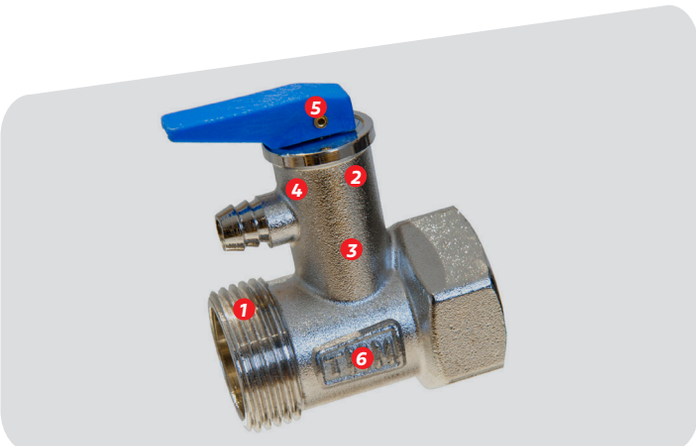

MATERIALS

1. **BODY** *CW617N brass, according to EN 12165.*
2. **SHAFT** *CW617N brass, according to EN 12164.*
3. **SAFTEY SYSTEM COMPONENTS** POM.
4. **SAFETY SYSTEM SPRING** *AISI-304 Stainless Steel.*
5. **SAFTEY SYSTEM PLUG** EPDM.
6. **CHECK-VALVE** POM.

Nickel-plated surface treatment on brass external surfaces.
All surfaces in contact with water are free of nickel.

FEATURES

NOMINAL PRESSURE *7 bar (PN-7) or 10 bar (PN-10), according to product reference.*
MAXIMUM TEMPERATURE *70°C.*
MINIMUM TEMPERATURE *0°C.*
Water starts to flow at a pressure of 0.05 bar.
Check-valve according to EN 13959.

NOTA: *All materials used to manufacture these valves are suitable for contact with water intended for human consumption.*

FLOW RATE VS PRESSURE

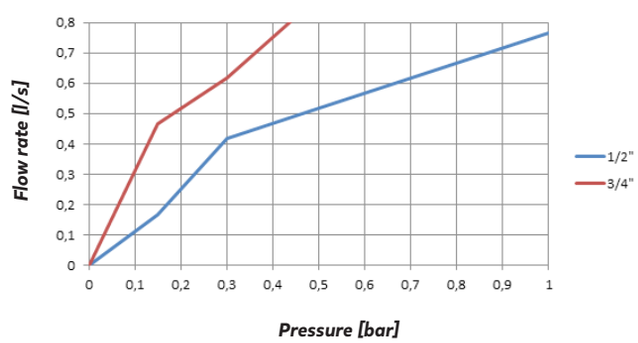

MAIN DIMENSIONS

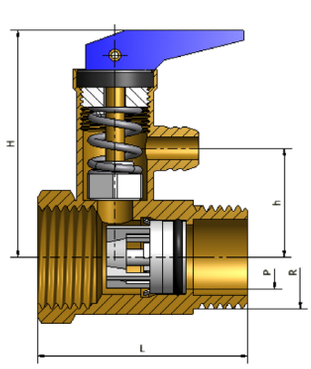

RANGE	PN (bar)	Ref.	Measure R.	DN	Dimensions (mm)			
					P	L	h	H
C361	7	0601101	1/2"	15	10	42,5	22	46
		0601102	3/4"	20	12,5	47,5	24	46
	10	0602101	1/2"	15	10	42,5	22	46
		0602102	3/4"	20	12,5	47,5	24	46

www.tmmanterola.com

Tips for installation, use and maintenance

TECHNICAL SPECIFICATIONS C-400

PRODUCT

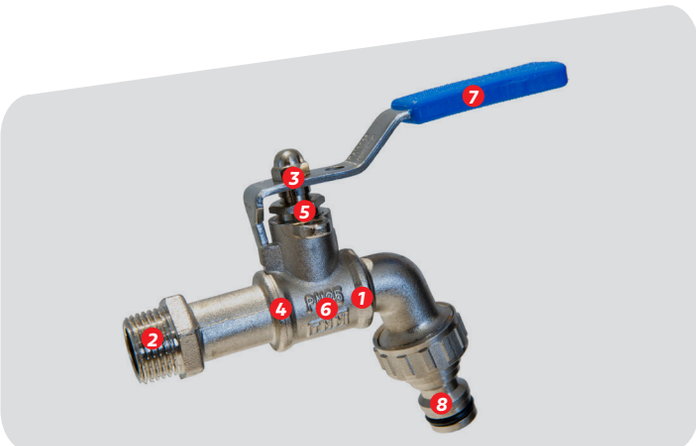

MATERIALS

1. **BODY** *CW617N brass, according to EN 12165.*
2. **LID** *CW617N brass, according to EN 12165.*
3. **SHAFT** *CW617N brass, according to EN 12164.*
4. **SEATS PTFE,** *suitable for contact with drinking water.*
5. **WATER-TIGHTNESS SEAL** EPDM
6. **BALL** Brass · *Chrome-Plated* · *Anti-Lime.*
7. **HANDLE** *AISI-304 Stainless Steel.*
8. **LINK** · *Nozzle.* · *Fast-Link*

Nickel-Plated brass.

FEATURES

NOMINAL PRESSURE *25 bar (PN-25).*
MAXIMUM TEMPERATURE *150°C.*
MINIMUM TEMPERATURE *-30°C.*
Internal surfaces in contact with water are resistant to corrosion.
ANTI-LEAK SYSTEM *on shaft*
Padlockable

NOTA: *All materials used to manufacture these valves are suitable for contact with water intended for human consumption.*

FLOW RATE VS PRESSURE

For a 3 bar pressure the flow rate is as follow, according to the inlet size of the valve.

Measure	Flow Rate [l/min]
1/2"	61
3/4"	75
1"	99

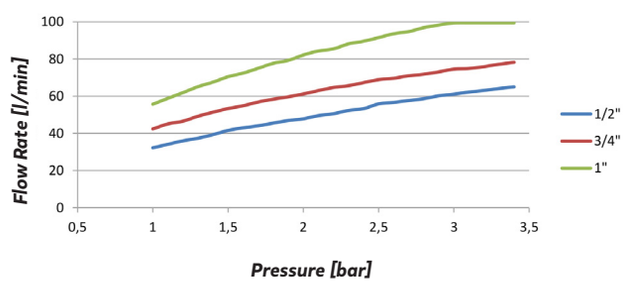

MAIN DIMENSIONS

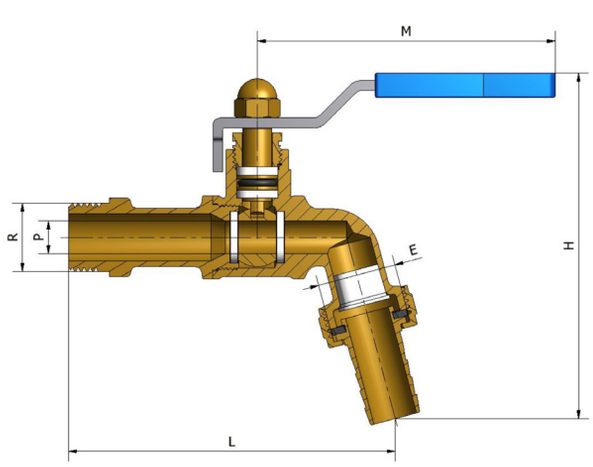

Ref.	R	E	DN	Dimensions (mm)			
				P	L	h	H
0101101	1/2"	3/4"	10	10	100	105	91
0101102	3/4"	1"	15	12	116	114	91
0101103	1"	1, 1/4"	15	15	128	133	110
0101104	1"	1"	15	15	125	129	110

www.tmmanterola.com

Tips for installation, use and maintenance

TECHNICAL SPECIFICATIONS M-400

PRODUCT

MATERIALS

1. **BODY** *CW617N brass, according to EN 12165.*
2. **LID** *CW617N brass, according to EN 12165.*
3. **SHAFT** *CW617N brass, according to EN 12164.*
4. **SEATS** *PTFE, suitable for contact with drinking water.*
5. **BALL** *Brass, chrome-plated*
6. **HANDLE** *· Steel with dacromet surface treatment.*
   · AISI-304 Stainless Steel.
   · Brass butterfly handle.
7. **LINK** *· Nozzle.*
   · Fast-Link
   Nickel-Plated brass.

FEATURES

NOMINAL PRESSURE *20 bar (PN-20).*
MAXIMUM TEMPERATURE *100°C.*
MINIMUM TEMPERATURE *-10°C.*
Internal surfaces in contact with water are resistant to corrosion.
ANTI-LEAK SYSTEM *on shaft*

NOTA: *All materials used to manufacture these valves are suitable for contact with water intended for human consumption.*

FLOW RATE VS PRESSURE

For a 3 bar pressure the flow rate is as follow, according to the inlet size of the valve.

Measure	Flow Rate [l/min]
1/2"	31
3/4"	66
1"	95

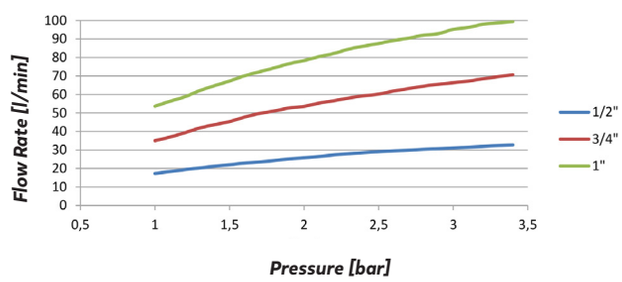

MAIN DIMENSIONS

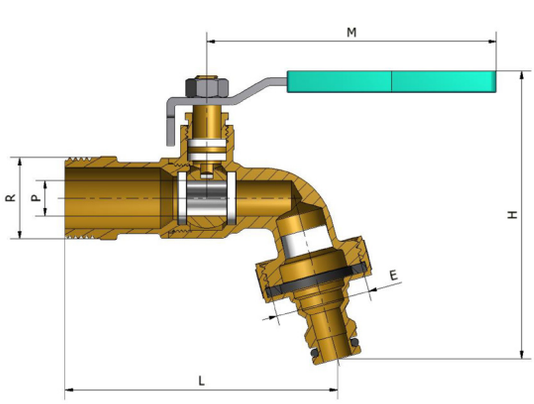

Ref.	R	E	DN	Dimensions (mm)			
				P	L	h	H
0103001	1/2"	1/2"	10	9	85	92	95
0103002	3/4"	3/4"	15	11,5	88	93	95
0103003	1/2"	3/4"	10	9	85	92	95
0103002	3/4"	1"	15	11,5	88	93	95
0103003	1"	1"	15	14	100	96	95

www.tmmanterola.com

Tips for installation, use and maintenance

TECHNICAL SPECIFICATIONS M-100

PRODUCT

FITTINGS

MATERIALS

1. BODY *CW617N brass, according to EN 12165.*
2. LID *CW617N brass, according to EN 12165.*
3. SHAFT *CW614N brass, according to EN 12164.*
4. SEATS *PTFE, suitable for contact with drinking water*
5. BALL *Brass, chrome-plated*
6. WATER-TIGHTNESS SEAL EPDM
7. HANDLES · *Steel with dacromet surface treatment.*
   · *Aluminum butterfly handle.*

Nickel-plated surface treatment on brass external surfaces.
All surfaces in contact with water are free of nickel.

FEATURES

NOMINAL PRESSURE *25 bar (PN-25).*
MAXIMUM TEMPERATURE *100°C.*
MINIMUM TEMPERATURE *-10°C.*
ANTI-LEAK SYSTEM *on shaft.*

NOTA: *All materials used to manufacture these valves are suitable for contact with water intended for human consumption.*

APPROVALS

Kv FLOW COEFFICIENT

It is called Kv to the water quantity, in cubic meter per hour, which must pass through the valve to generate 1 bar pressure loss.

Each valve size has a Kv value.

Measure	½″	¾″	1″	1.¼″	1.½″	2″
Kv [(m³/h)/(bar)½]	16	27	54	71	87	456

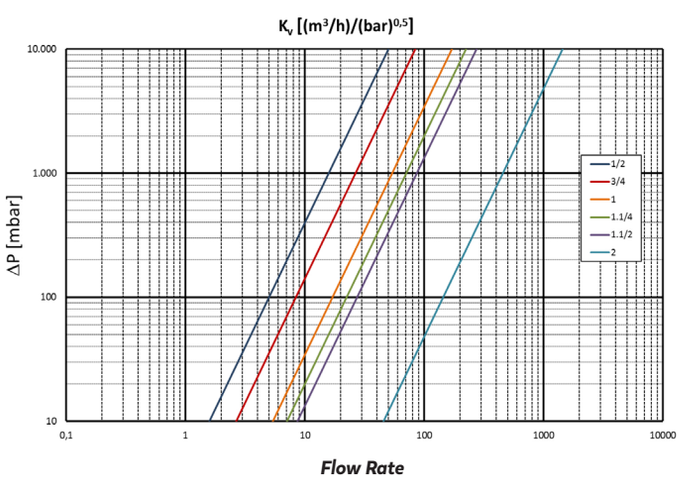

PRESSURE LOSS CHART

Pressure loss chart depending on the flow, according to EN 1267.

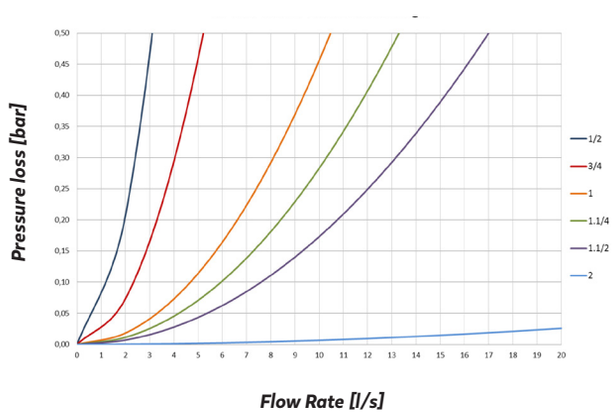

MAIN DIMENSIONS

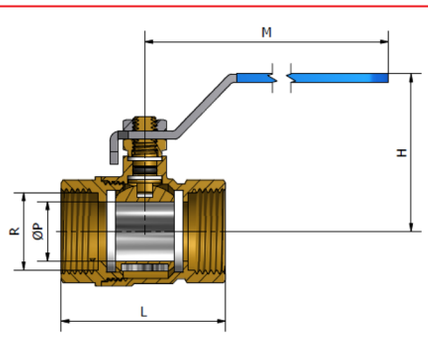

Ref.	Measure R	DN	Dimensions (mm)			
			P	L	H	M
0200003	½″	15	13,5	46,5	45,5	86
0200004	¾″	20	18,5	52	49	100
0200005	1″	25	22,5	65	58	100
0200006	1.¼″	32	27	75	62	100
0200007	1.½″	40	34	89	74	140
0200008	2″	50	45	103	82,5	140

www.tmmanterola.com

Tips for installation, use and maintenance

TECHNICAL SPECIFICATIONS M-200

PRODUCT

MATERIALS

1. BODY *CW617N brass, according to EN 12165.*
2. LID *CW617N brass, according to EN 12165.*
3. SHAFT *CW617N brass, according to EN 12164.*
4. SEATS *PTFE, suitable for contact with drinking water*
5. BALL *Brass, chrome-plated*
6. HANDLE · *Steel with dacromet surface treatment.*
   · *AISI-304 Stainless Steel.*
   · *Brass butterfly handle.*
   · *Brass square handle.*

Nickel-plated brass.

FITTINGS

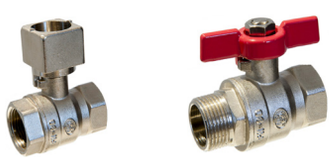

FEATURES

NOMINAL PRESSURE *30 bar (PN-30).*
MAXIMUM TEMPERATURE *150°C.*
MINIMUM TEMPERATURE *-10°C.*
ANTI-LEAK SYSTEM *on shaft.*

NOTA: All materials used to manufacture these valves are suitable for contact with water intended for human consumption.

Kv FLOW COEFFICIENT

It is called Kv to the water quantity, in cubic meter per hour, which must pass through the valve to generate 1 bar pressure loss.

Each valve size has a Kv value.

Measure	½"	¾"	1"	1.¼"	1.½"	2"
Kv [(m³/h)/(bar)½]	17	29	56	80	87	519

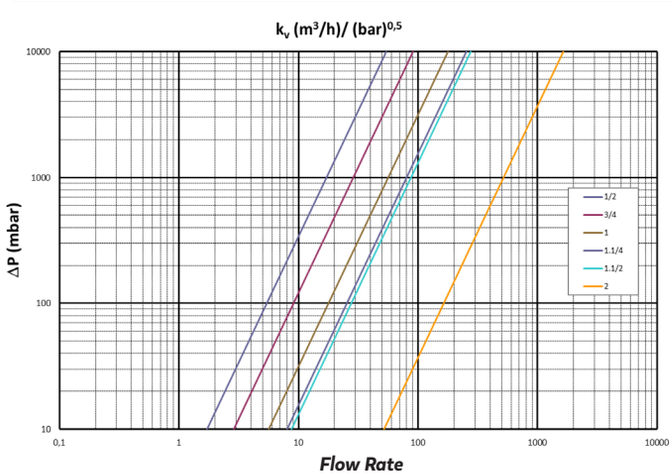

APPROVALS

PRESSURE LOSS CHART

Pressure loss chart depending on the flow, according to EN 1267.

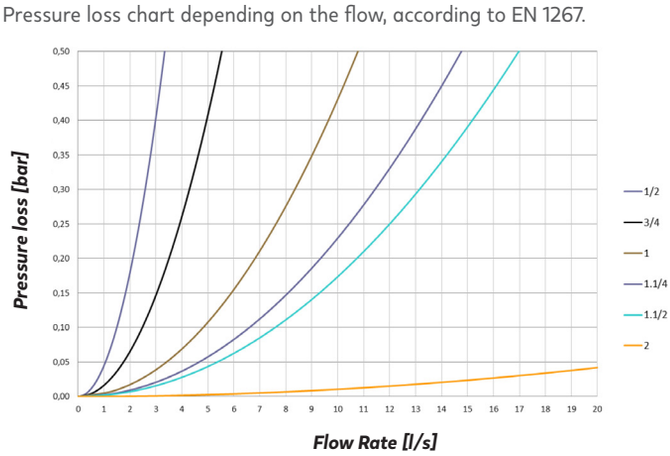

MAIN DIMENSIONS

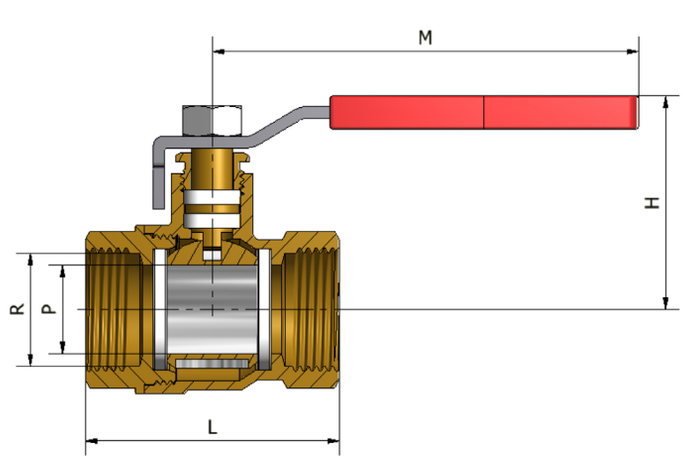

Ref.	Measure R	DN	Dimensions (mm)			
			P	L	H	M
0201821	¼"	8	10	42	40	94
0201822	3/8"	10	10	42	40	94
0201823	½"	15	14	48	42	94
0201824	¾"	20	19	56	46	94
0201825	1"	25	24	65	55	125
0201826	1.¼"	32	30	75	60	125
0201827	1.½"	40	37,5	86	77	146
0201828	2"	50	47	102	85	146
0201829	2.½"	65	57	128	92	205
0201830	3"	80	69	145	107	225
0201831	4"	100	90	185	125	225

www.tmmanterola.com

Tips for installation, use and maintenance

TECHNICAL SPECIFICATIONS T-750

PRODUCT

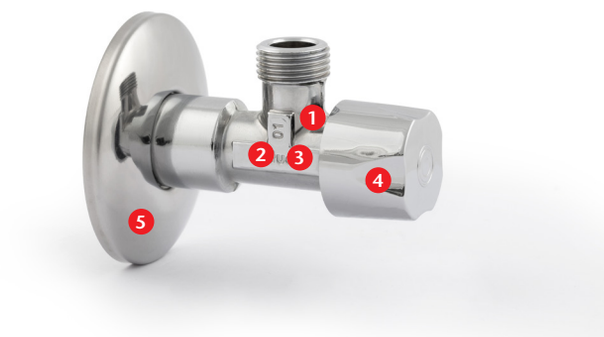

MATERIALS

1. **BODY** *CW617N brass, according to EN 12165. Chrome-plated.*
2. **SPINDLE** *CW617N brass, according to EN 12164.*
3. **WATER-TIGHTNESS SEAL** NBR.
4. **HANDLE** ABS *chrome-plated.*
5. **TAILPIECE** *Stainless Steel*

DESCRIPTION

Regulating angle valve to be installed on water supply systems of bathroom and kitchen taps, bidets and toilet tanks.

Flow regulation by 3/4 turn spindle which allows you to regulate the inlet flow of cold and hot water in order to compensate pressure differences betwen them.

FLOW RATE VS PRESSURE

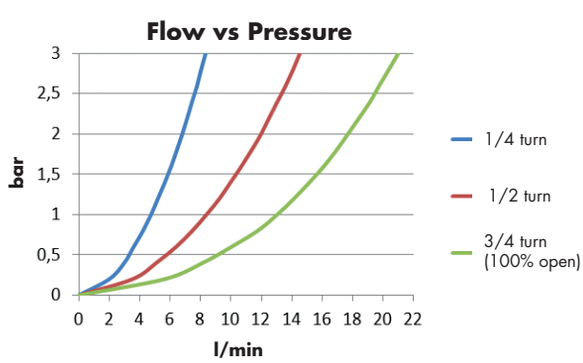

FEATURES

Recommended **MAXIMUM WORKING PRESSURE** *10 bar.*
MAXIMUM PRESSURE *16 bar (PN-16).*
RECOMMENDED MAXIMUM WORKING TEMPERATURE *65°C.*
MAXIMUM TEMPERATURE *85°C.*
MINIMUM TEMPERATURE *0°C.*

Flow rate > 21 lit/min, at a pressure of 3bar, based on EN-ISO 3822-2.
Fast regulation.
3/4 turn closure.
Knurled inlet thread.
100% verified against leakage.
Durability: guaranteed 2.000 maneuver cycles.

APPROVALS

Design and construction standards EN-1213 and DIN 50930-6.

NF

MAIN DIMENSIONS

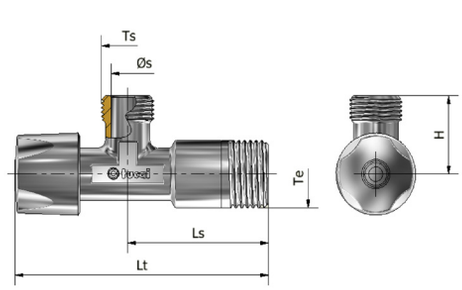

Ref.	Dimensions (mm)					
	Ts	Te	Lt	Ls	Øs	H
0400007	3/8"	½"	80	44,5	10,5	24
0400008	3/8"					
0400009	½"				13,5	
0400010	½"					

www.tmmanterola.com

Tips for installation and maintenance

TECHNICAL SPECIFICATIONS E-650

PRODUCT

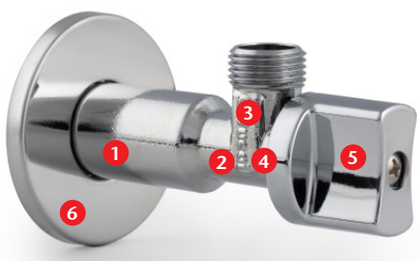

MATERIALS

1. **BODY** CW617N according to EN 12165, Chrome-plated
2. **BALL CLOSURE** POM
3. **WATER-TIGHTNESS SEAL** EPDM
4. **WATER-TIGHTNESS ORINGS EPDM**
5. **HANDLE CHROME-PLATED ABS**
6. **TAILPIECE STAINLESS STEEL**

DESCRIPTION

Angle valve to be installed on water supply systems of bathroom and kitchen taps, bidets, toilet tanks and appliances as washing machines.

Added the new anti-lime system KAREA SOLUTION from TMM, which makes this valve especially appropriate to resist lime effects lengthening its useful life.

FEATURES

NOMINAL PRESSURE 16 bar (PN-16).
ANTI-LIME, SOFT OPERATION
FLOW RATE >20 Lit/min at 3 bar, according to EN-ISO 3822-2
1/4 turn closure
WORKING TEMPERATURES 0°C to 70°C
All materials in contact with water are appropriate for use in water intended to human consumption.

APPROVALS

Spanish Royal Decree 140/2003

European Directive 98/83

MAIN DIMENSIONS

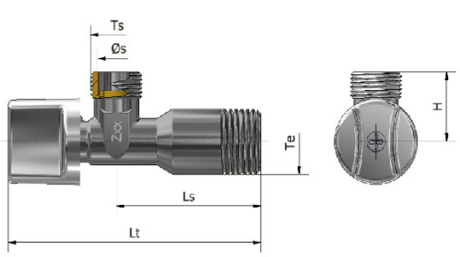

Ref.	Dimensions (mm)					
	Ts	Te	Lt	Ls	Øs	H
0400011	⅜″	½″	82	47	12,2	22
0400012	½″				15	24
0400015	⅜″		96	62	12,2	22
0400020	¾″				20	26

Llobateras, 10-12, Polígono Industrial Santiga
08210 Barberà del Vallès (Barcelona, Spain)
Tel. +34 93 718 95 62
www.tucai.com

Bº Santiago s/n Apdo. de correos:18,
20810 ORIO – GUIPUZCOA (ESPAÑA)
Tel. +34 943 83 07 43
www.tmmanterola.com